#	Part Number	Component	Install Number	Qua
A	TF36R	Base-36 (Tree Fort)	TF24	1
B	TP36	Base-36 (Tree Post)	TP24	1
C	FA4000	Log Transfer Platform-3'	FA4000	1
D	FA4303	Arch Bridge	FA4303	1
E	FA4500	Wood Plank Enclosure	FA4500	1
F	FA4701	Stream Slide-3'	FA4701	1
G	FA4900	Clubhouse Roof (Tree Fort)	FA4900	1
H	FA5103	Ladder Climber-3'	FA5103	1
I	FA5117	Oak Slice-3'	FA5117	1
J	FA5119	Tree Stump Climber-3'	FA5115	1
K	VA3002	2-12 Age Plaque		1
L	FA4505L	Enclosure-15"-Left Hand	FA4505	3
M	FA4505R	Enclosure-15"-Right Hand	FA4505	3

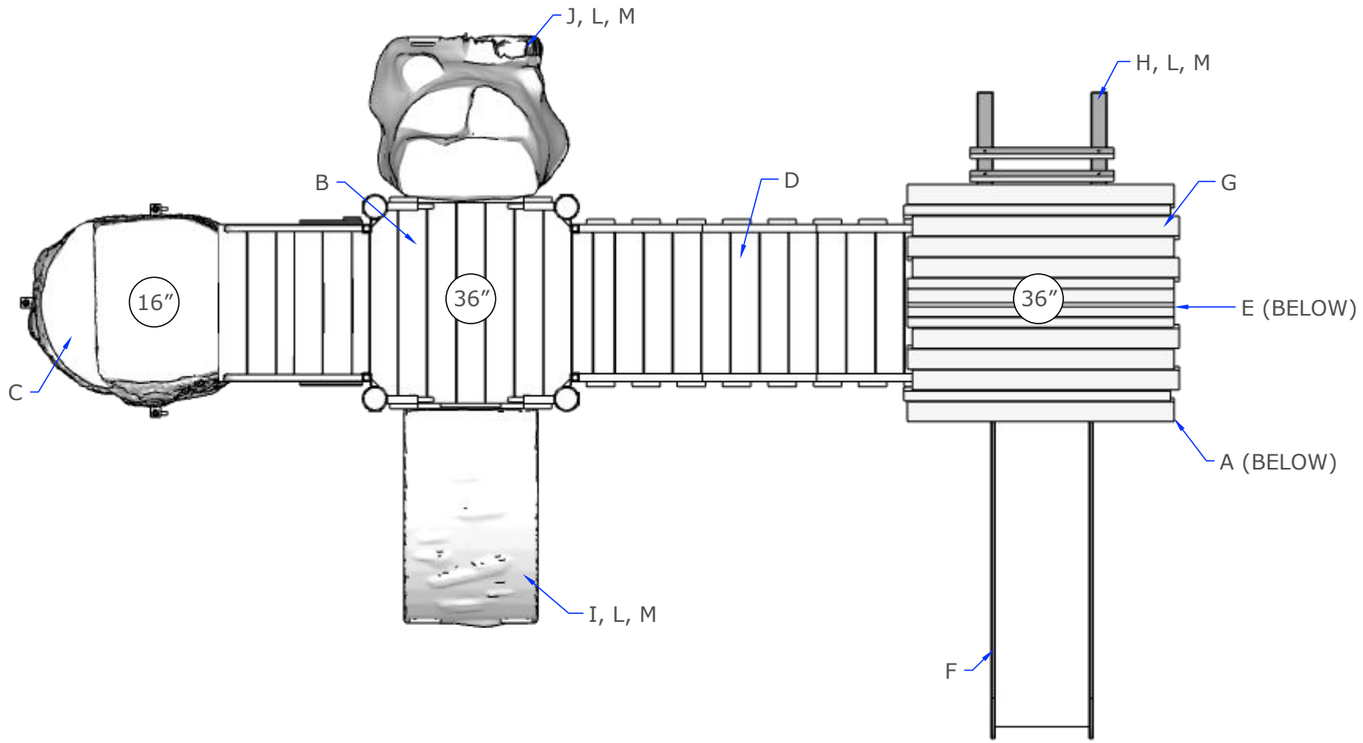





All images and concepts are Copyright © 2025, Cre8Play, LLC - All rights reserved. Drawings are not to scale unless otherwise specified.

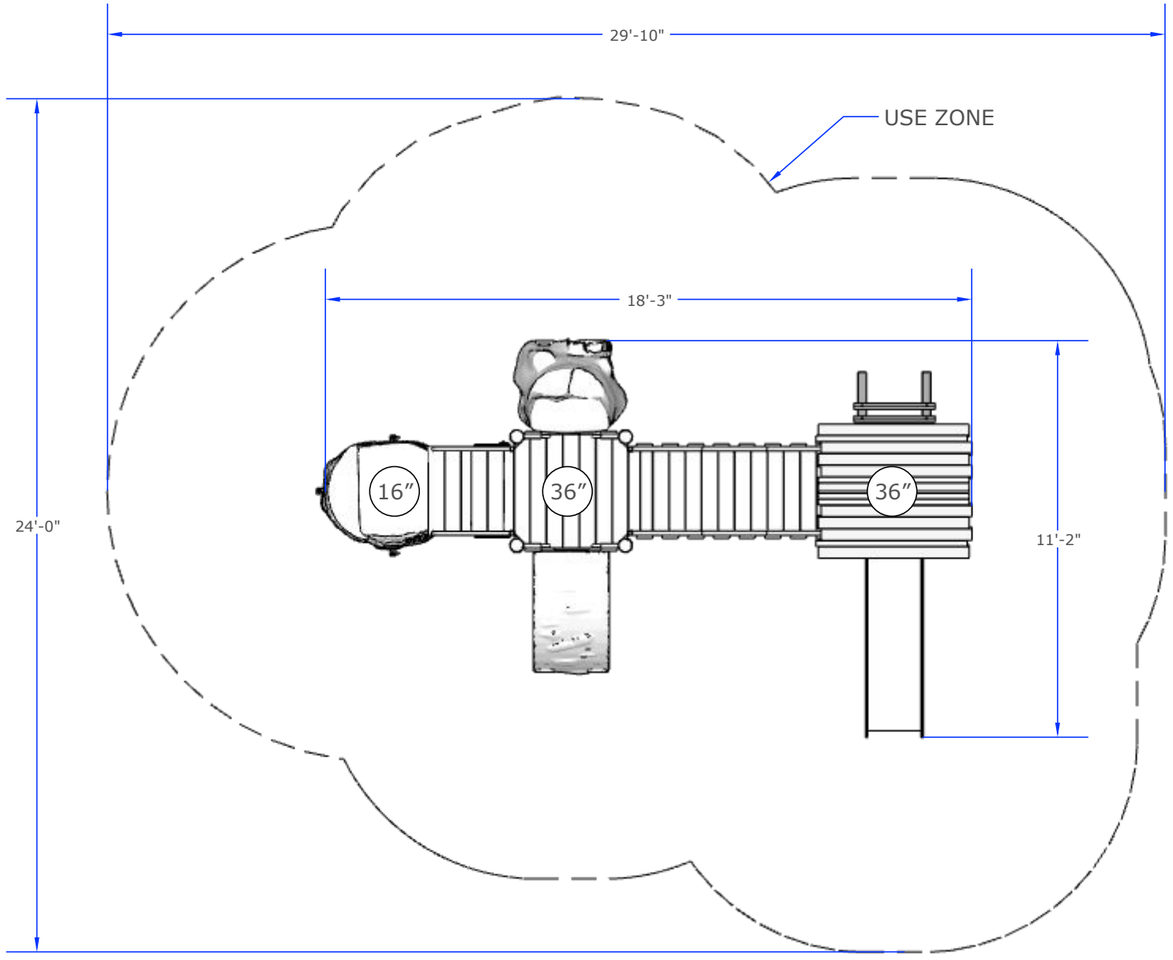

A 2 80001-PREMIER
PLAN VIEW

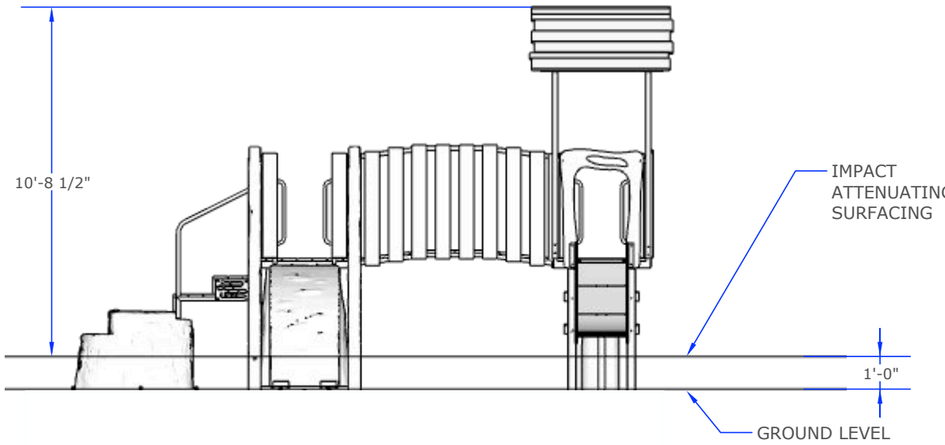

B 2 80001-PREMIER
ELEVATION

Installation Notes:
1- Paved surfaces, such as asphalt and concrete, are NOT acceptable for use under your structure.
2- It is the consumer's responsibility to check with local utilities prior to excavating footings for any underground utility lines that may exist within the installation area.
3- It is the consumer's responsibility to check local soil conditions and drainage within the site area. Inquire with local contractors for appropriate recommendations.
4- Assemble the entire structure BEFORE anchoring to concrete unless instructed in the individual component installation instructions.
5- Read the installation instructions provided prior to beginning construction.
6- The complete area under and around your play structure must be covered with impact attenuating material.

All images and concepts are Copyright © 2025, Cre8Play, LLC - All rights reserved. Drawings are not to scale unless otherwise specified.

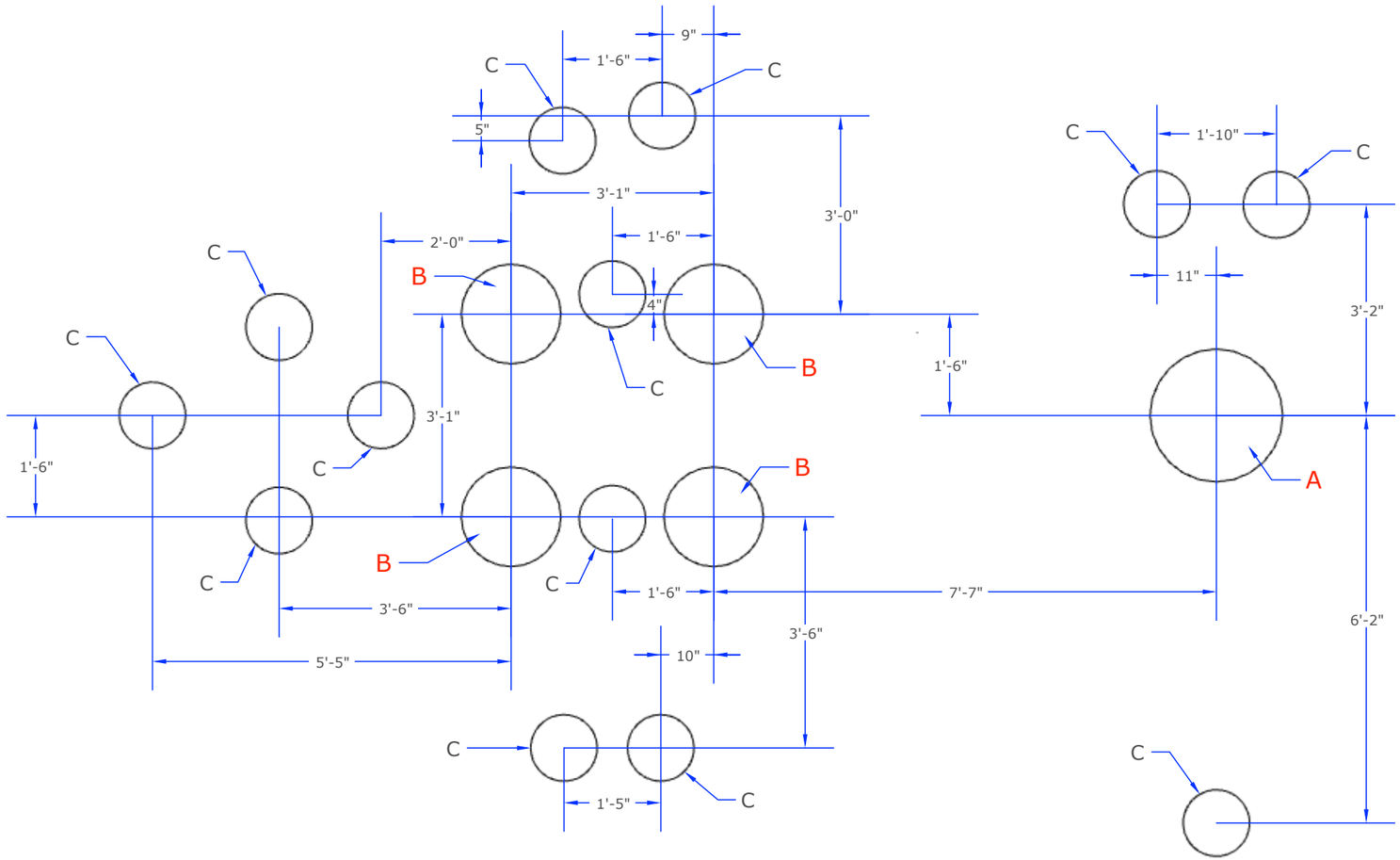

A/3 CONCRETE FOOTERS
PLAN VIEW

A = 24” DIAMETER X 36” DEEP FOOTING (SUPPORT POST)
B = 18” DIAMETER X 24” DEEP FOOTING (SUPPORT POST)
C = 12” DIAMETER X 12” DEEP FOOTING (COMPONENT)

All images and concepts are Copyright © 2025, Cre8Play, LLC - All rights reserved. Drawings are not to scale unless otherwise specified.

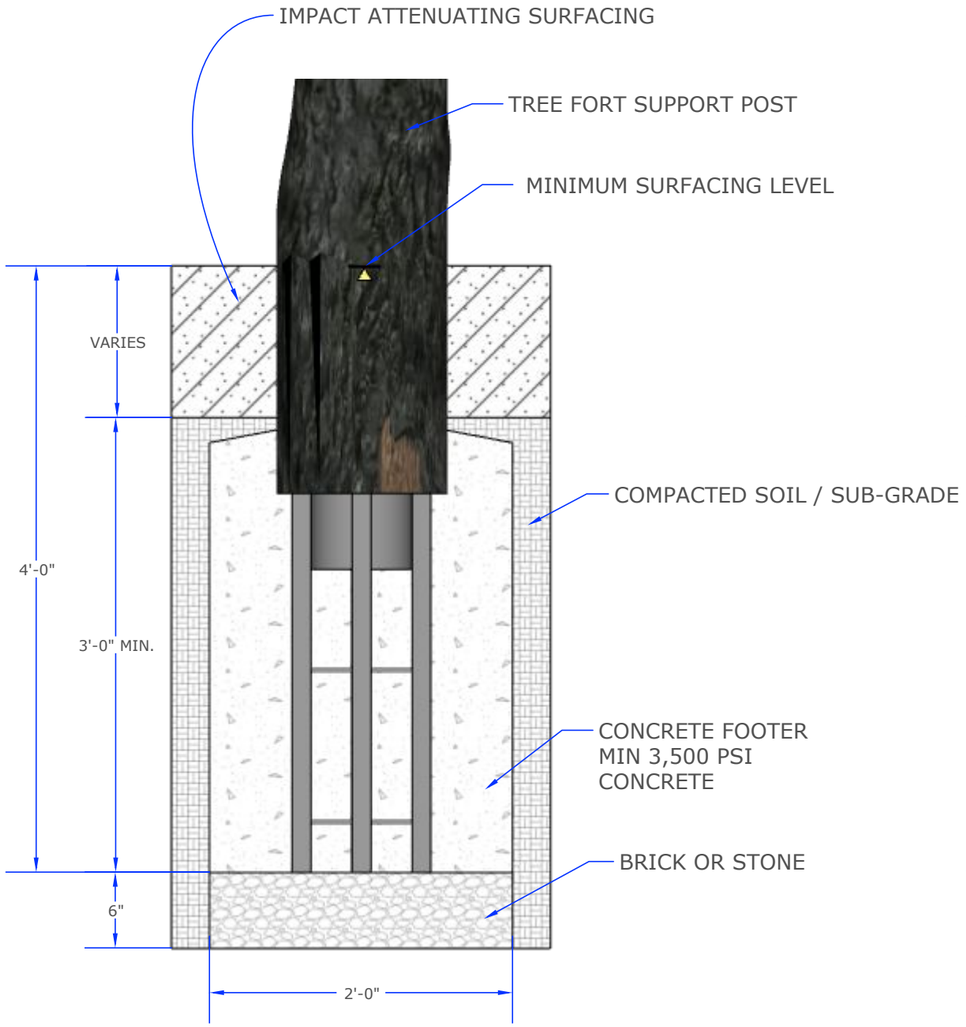

A CONCRETE FOOTING SECTION
SECTION-ELEVATION

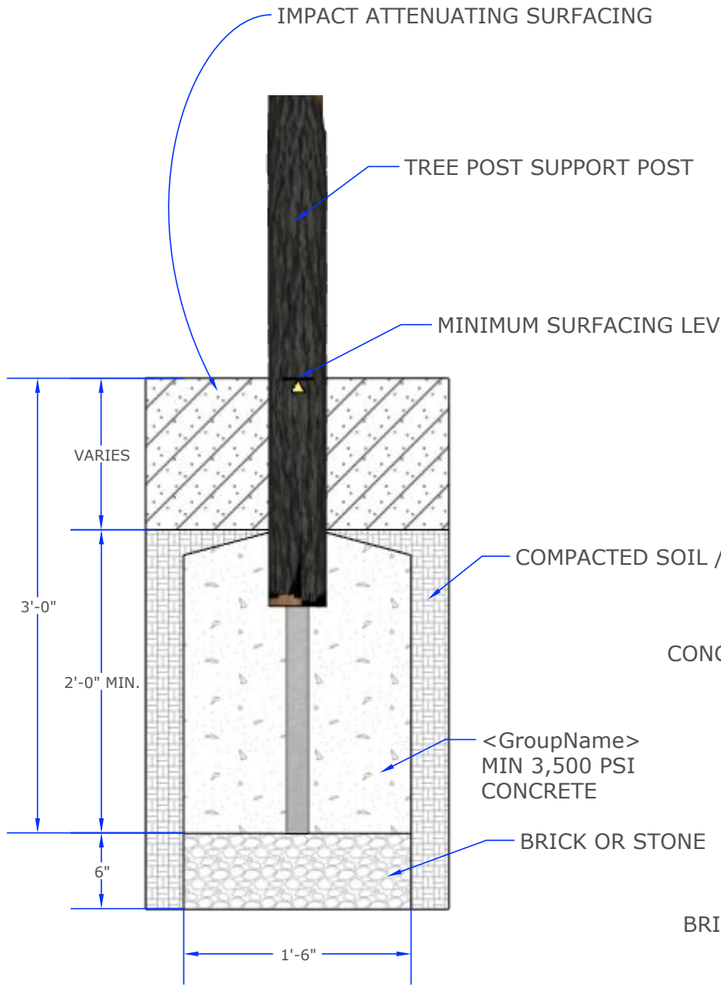

B CONCRETE FOOTING SECTION
SECTION-ELEVATION

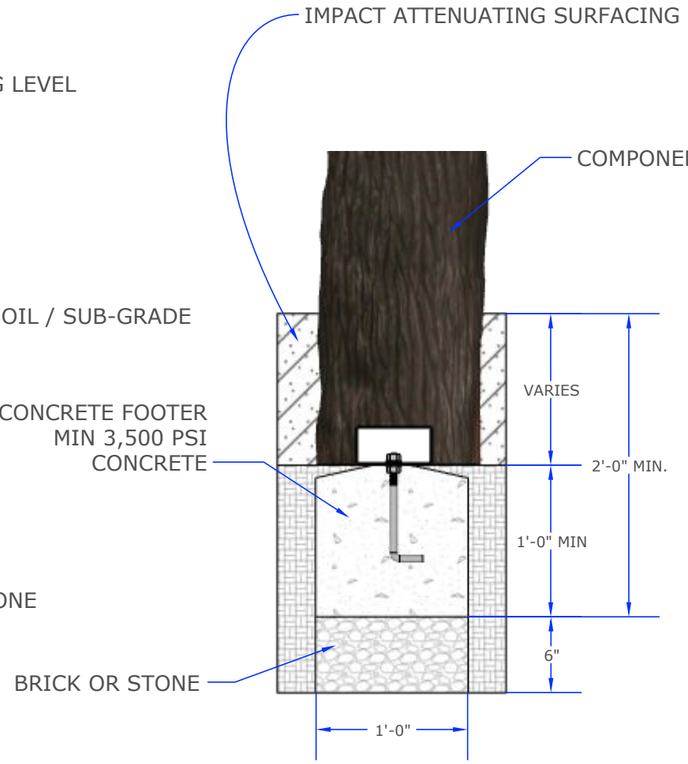

C CONCRETE FOOTING SECTION
SECTION-ELEVATION

Footing Notes:

1- Do not encase the bottom of the support post in concrete. Place the post directly on packed stone or brick.
2- The footings shown in this document are recommendations based on historical performance in average soil conditions.
Footing dimensions may be modified by owner based on actual soil conditions.
Before changing footing dimensions, we strongly recommend the footings be reviewed and approved by a registered engineer.
3- The base of the footings must be below the frost line.
4- Assemble the entire play structure before pouring concrete unless instructed to do so in the individual play component.

All images and concepts are Copyright © 2025, Cre8Play, LLC - All rights reserved. Drawings are not to scale unless otherwise specified.